Midea

CHIONE
INVERTER

AI Comfort All in One

Inverter Split Wall Mounted
PRODUCT CATALOGUE
2026

Smart Energy Management

Visible saving under your thumb

SmartHome
Smart Compatible

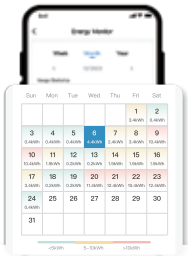

Energy Monitor

Monitor the daily, weekly, and monthly usage duration and energy consumption of the air conditioner.

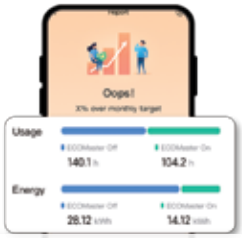

Energy Report

The energy consumption report includes ECOMASTER activation time, energy usage, and comparisons with the previous month.

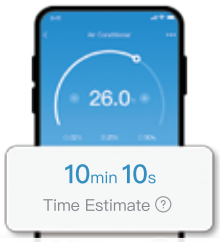

Time Forecasting

Active ECOMASTER at cool mode, you can see how soon the room temperature is going to reach the target temperature.

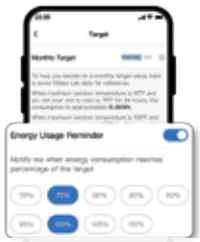

Energy Reminder

Set a monthly energy consumption target, and you will be notified once the consumption reaches a percentage of the set target.

Smart Scenario Application

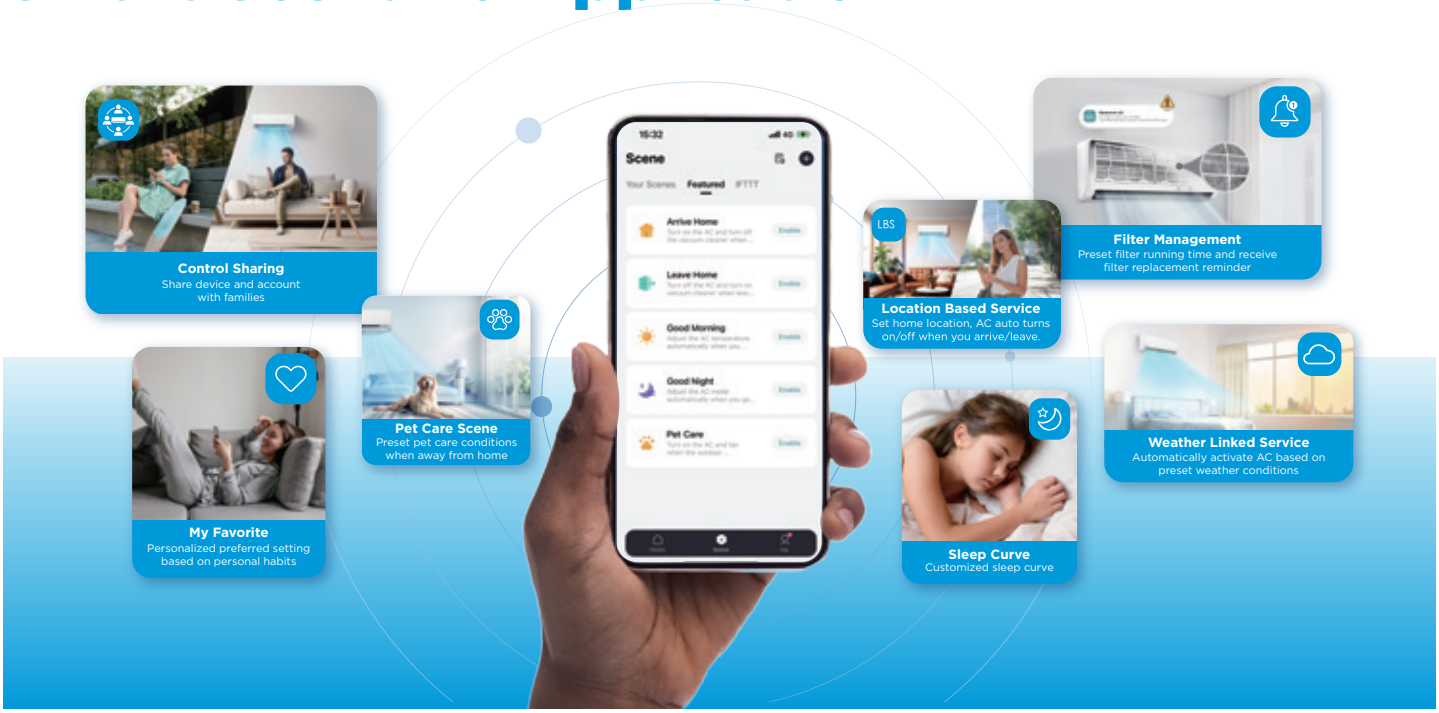

Smart Ecological Connection

Midea air conditioning supports multiple device connections, including tablets, smart speakers, and smart watches, allowing you to control the air conditioning hands-free at home at any time. It also supports device sharing, so multiple users can enjoy coolness at will.

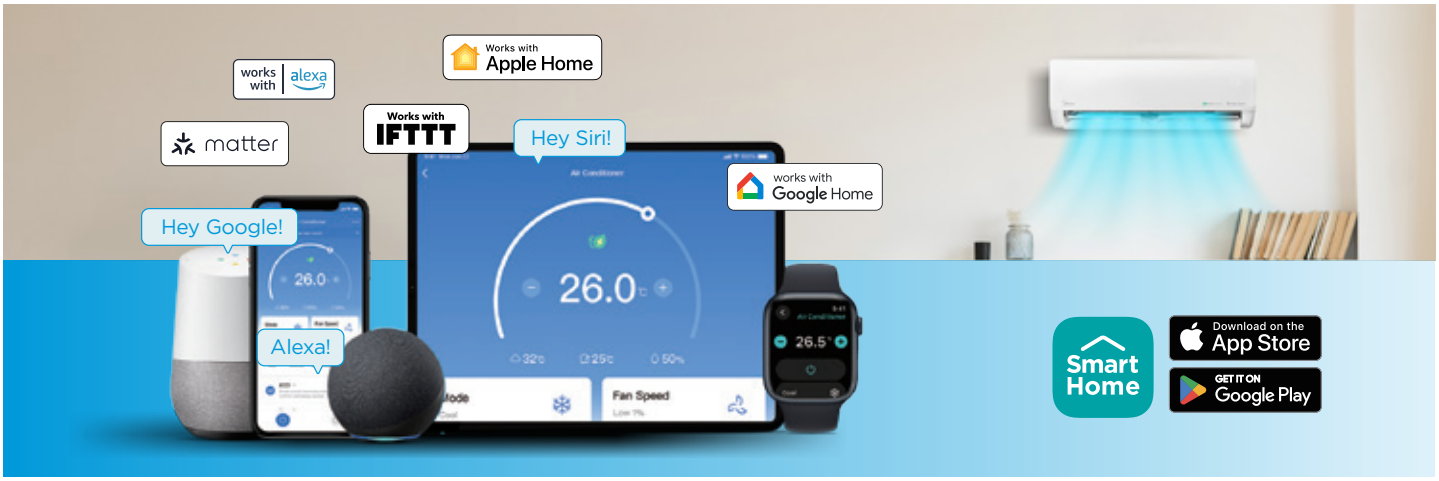

AI ECOMASTER

Master AI Saving, Better Comfort Cooling

Real AI master control based on giga-scale big data,
Balancing energy-saving and comfort needs.

Master Giga Data

Master Precise Control

Master Comfort Saving

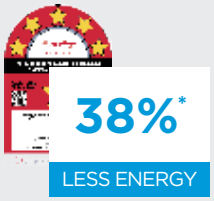

38%*

LESS ENERGY

Percentage energy saving compare to the lowest 2 stars rating air conditioning. 38% is applicable to 1HP Chione Inverter.

MASTER

30%* Extra

Energy Saving with AI Algorithm

MASTER AI Temperature Control

±0.3°C

Verified by SGS Performance Tested

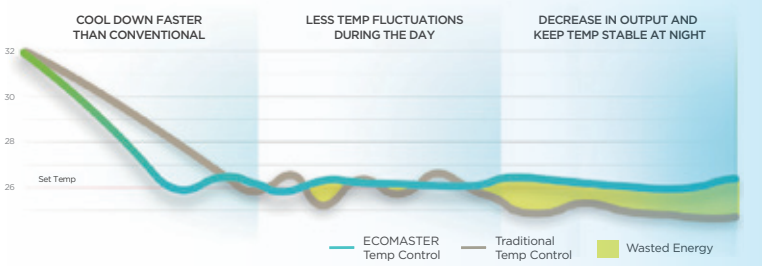

* Compare the 4-hour power consumption of the same model in ECOMASTER mode and normal mode.

AI Humidity Control

(Optional by Apps)

Midea's AI Humidity Control automatically maintains the ideal 40%-70% RH range for ultimate comfort. Powered by AI algorithms, it intelligently adjusts fan speed and cooling power to add or remove moisture, ensuring you enjoy fresh, balanced air without ever lifting a finger.

Silent Mode

Worried your AC's constant hum might be disturbing your family or neighbors, especially at night?
Midea's One-Touch Silent Mode significantly reduces outdoor unit noise.
Simply long-press the 'Fan Speed' button on your remote or activate it instantly via Smart Home app. Midea advanced algorithm then takes over, precisely optimizing the DC motor's speed in real-time.
The result? A 3dB reduction—achieving 50%* less noise energy for a noticeably more peaceful environment, all while maintaining powerful cooling.

* Calculation follows the acoustic principle.
* For the best performance, Outdoor Silent Mode is available in Cooling Mode when the outdoor temp < 35°C.

I - Clean

Reclean the AC, Refresh your breath.

Midea Inverter AC has been upgraded from water washing (20 mins) to frost cleaning (42 mins), which can remove more dust and bacteria, keeping the AC clean and performing well.

1 **Condensed Water** 10min — Cooling mode & Mid-speed wind

2 **Frosting** 10min — The temperature cools rapidly (T≤**-10°C**) and frost forms on the evaporator surface.

3 **Washing** 20min — Defrost into water to remove dust and dirt.

4 **Drying** 2min — Dry the evaporator to prevent mold growth.

Total **42mins**

Prime Guard

Built to Last

Prime technologies in reliability and durability Guard comfort cool.

Wide Voltage Operation

Thanks to Ultra Electronic Control System, Midea's Inverter can work stably in 80V-265V*. Whether it is the peak of urban electricity consumption or the shortage of power supply in remote areas, it can always work consistently and smoothly.

CONVENTIONAL 184V 265V

MIDEA 80V 265V

* The voltage operation range of BP3 is 80-265V, BP2 is 150-265V, and 18k and above is 120-256V.

Reliable PCB with UV Conformal Coating

Curing using UV light, Greener and with 2x Thicker and Higher Density Protection

Corrosion Area <0.02%*

Rating Number 9.8**

Verified by intertek

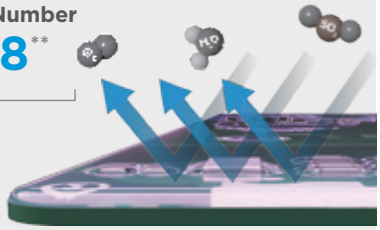

* Depended on the using industrial environment with salt contamination (Ref. ISO 21207: 2015, Annex A, test method B, JIS Z 2371:2015 Annex JC)
** The full rating number is 10.

HYPER GRAPFINS™

12.5X* **Corrosion Resistance than Blue Coated Fins**

Graphene is a single monolayer of carbon atoms, tightly bound in a hexagonal honeycomb lattice. When graphene is added to the anti-corrosion layer, the density of the layer can be improved to resist corrosion.

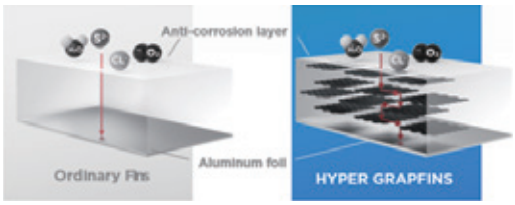

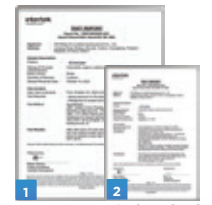

Verified by intertek

* The judgment standard of corrosion resistance is based on comparing the maximum corrosion area ratio of the rating number in JIS Z 2371-2015. Compared samples are Midea fins: Midea blue coated fins in HD2202-2/HW3308. Midea HYPER GRAPFINS in HMD011/HW3308.

AUTO DEDUSTING

When the AC is turned off, the fan blade of the outdoor unit will automatically rotate in reverse to get rid of the accumulated sand and dust, ensuring the AC is clean and operates well in any environment.

Cool Flash

5°C in 10 mins* from 36°C to 31°C

Air Volume 665M³/h

Air Distance** 8.1M

The latest generation of COOLFLASH achieves faster cooling speed, stronger air circulation, larger swing angle, and further airflow distance through dual upgrades of hardware and software.
With one press of the COOLFLASH button, the room can be quickly cooled down to the desired temperature, immersing you in an evenly cool room.

* Tested by Midea Lab for 10-minute cooling. The room temp of 1.5HP Chione AC dropped by 5°C, with an initial room temp is 36°C, and the outdoor temp is 43°C, 60% RH.
** Tested on the 1.5HP Chione AC in Coolflash mode by Midea Lab, the farthest distance refers to a wind speed of no less than 0.3m/s

Power Cooling Beats the Heat

Even at high temperatures of up to **55°C**, Midea Inverter still operates effectively, beating heat and providing optimal cooling to the room.

FEATURES

- ECOMASTER 30% Extra Energy Saving
- AI Humidity Control (Option by Apps)
- Silent Mode
- HYPER GRAPFINS
- Reliable PCB With UV Conformal Coating
- I-Clean
- Coolflash 5°c In 10 Mins
- Smart Control
- Wide Voltage Operation
- Auto Dedusting

APPEARANCE

Indoor Unit

Remote Control

Wired control (optional)

Outdoor Unit

SPECIFICATIONS

Model	Indoor		MSCH-10CRFN8-ID	MSCH-13CRFN8-ID	MSCH-19CRFN8-ID	MSCH-22CRFN8-ID	MSCH-25CRFN8-ID	MSCH-30CRFN8-ID
	Outdoor		MSCH-10CRFN8-OD	MSCH-13CRFN8-OD	MSCH-19CRFN8-OD	MSCH-22CRFN8-OD	MSCH-25CRFN8-OD	MSCH-30CRFN8-OD
Cooling Capacity	Rated (Min-Max)	Btu/h	10,000(1,250-11,109)	12,000(3,900-12,500)	18,000(6,900-18,500)	22,000(4,265-23,000)	24,000(9,600-25,500)	30,000(11,500-31,000)
Power consumption	Rated (Min-Max)	W	880(135-1,050)	1,250(150-1,350)	1,758(190-1,850)	2,149(280-2,200)	2,512(790-2,750)	2,930(690-3,360)
Running current	Rated (Min-Max)	A	3.83(0.59-4.56)	5.09(1.6-5.87)	7.64(1.48-8.7)	9.34(1.3-10)	10.92(3.95-11.95)	12.2(4.5-14.6)
CSPF(Cooling seasonal performance factor)		Wh/Wh	5.68	5.41	5.30	5.27	5.11	5.23
Energy Efficiency Star Rating								
Power supply		V,Hz,Ph	220-240V~,50&60Hz,1Ph (power supply to indoor)					
Indoor unit	Fan motor type		Brushless DC Motor					
	Indoor air flow (H/M/L)	m^3/h	630/440/400	630/440/400	895/740/650	1,300/960/760	1,300/960/760	1,300/1,030/900
		cfm	370/259/235	370/259/235	526/435/382	765/565/447	765/565/447	765/606/529
	Indoor Sound level (H/M/L)	dB(A)	39.5/34.5/31.5	39.5/34.5/31.5	44.5/37/34.5	48.5/40/36.5	47/40/36.5	46.0/42.0/39.5
	Dimension(W*D*H)	mm	813x201x289	813x201x289	975x218x308	1055x231x330	1055x231x330	1055x231x330
	Packing (W*D*H)	mm	870x270x365	870x270x365	1035x295x385	1130x405x310	1130x405x310	1130x405x310
	Net/Gross weight	Kg	7.7/9.8	7.7/9.9	10.1/13.3	12.1/15.6	12.1/15.6	12.1/15.7
Outdoor unit	Fan motor type		Brushless DC Motor					
	Outdoor air flow	m^3/h(cfm)	1,300(765)	1,300(765)	2,100(1,235)	2,300(1,353)	2,500(1,471)	3,500(2,059)
	Outdoor Sound level	dB(A)	52	55	56	58	59	56.5
	Dimension(W*D*H)	mm	668x252x469	668x252x469	765x303x555	805x330x554	805x330x554	890x342x673
	Packing (W*D*H)	mm	765x270x515	765x270x515	887x337x610	915x370x615	915x370x615	995x398x740
	Net/Gross weight	Kg	16.7/18.6	17.0/18.5	24.2/26.9	27.4/29.7	29.9/32.5	38.3/41.4
	Refrigerant Charge	g	R32/360g	R32/420g	R32/650g	R32/750g	R32/830g	R32/900g
	Design pressure	MPa	4.3/1.7	4.3/1.7	4.3/1.7	4.3/1.7	4.3/1.7	4.3/1.7
Refrigerant piping	Liquid side/ Gas side	mm(inch)	Φ6.35/Φ9.52(1/4"/3/8")	Φ6.35/Φ9.52(1/4"/3/8")	Φ6.35/Φ12.7(1/4"/1/2")	Φ6.35/Φ12.7(1/4"/1/2")	Φ6.35/Φ12.7(1/4"/1/2")	Φ6.35/Φ15.9(1/4"/5/8")
	Max. refrigerant pipe length	m	25	25	30	30	50	50
	Max. difference in level	m	10	10	20	20	25	25
Indoor-Outdoor connection wiring (Not included)			4x1.5 mm^2	4x1.5 mm^2	4x2.5 mm^2	4x2.5 mm^2	4x2.5 mm^2	4x2.5 mm^2
Power supply wiring (Not included)			3x1.5 mm^2	3x1.5 mm^2	3x2.5 mm^2	3x2.5 mm^2	3x2.5 mm^2	3x2.5 mm^2
Thermostat type			Wireless Remote Control,Build-in Smart Control (Wired control optional)					

INDOOR UNIT DIMENSION

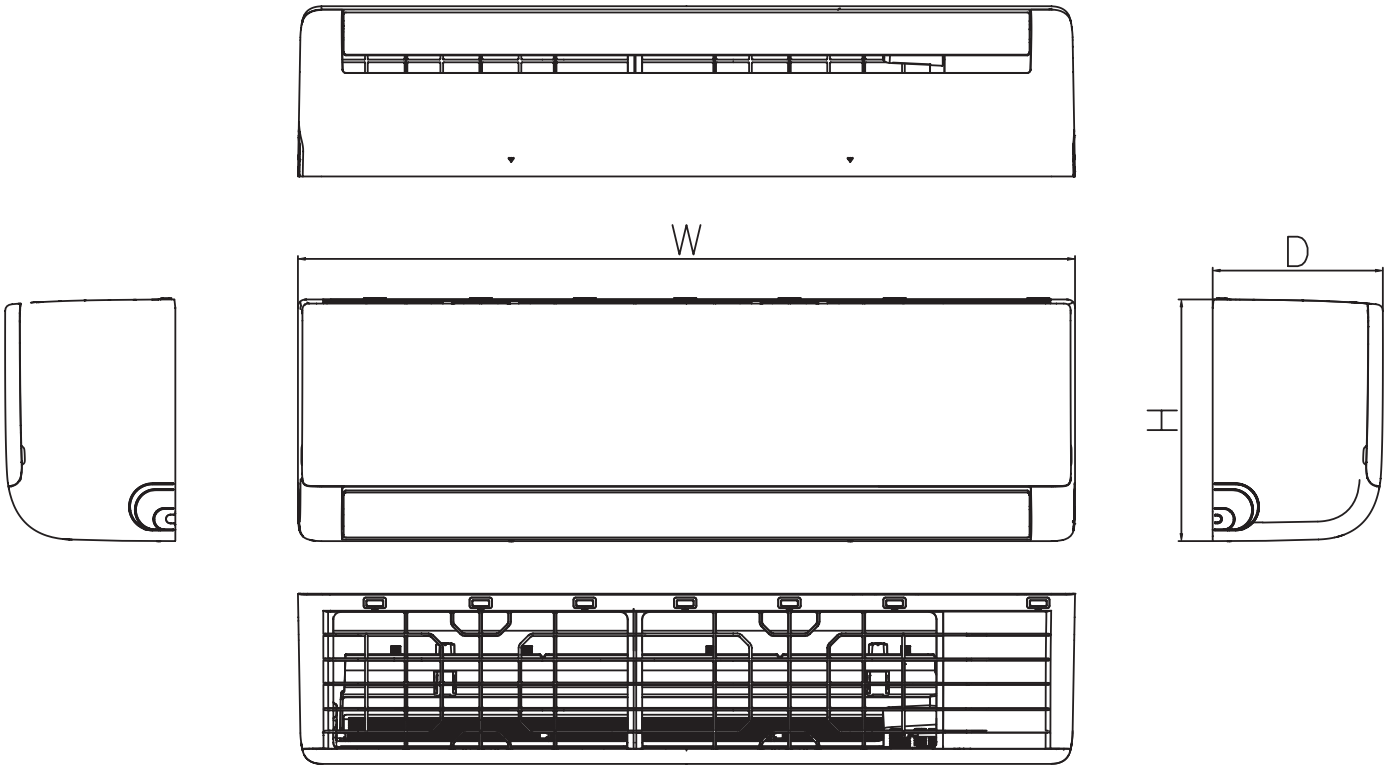

Chione INDOOR DIMENSION			
Model	**W (mm)**	**D(mm)**	**H(mm)**
MSCH-10CRFN8	813	201	289
MSCH-13CRFN8	813	201	289
MSCH-19CRFN8	975	218	308
MSCH-22CRFN8	1055	231	330
MSCH-25CRFN8	1055	231	330
MSCH-30CRFN8	1055	231	330

OUTDOOR UNIT DIMENSION

MSCH-10CRFN8-OD & MSCH-13CRFN8-OD

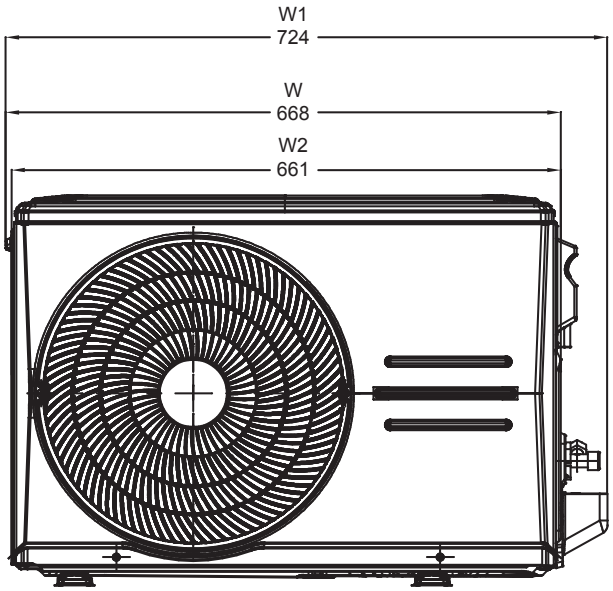

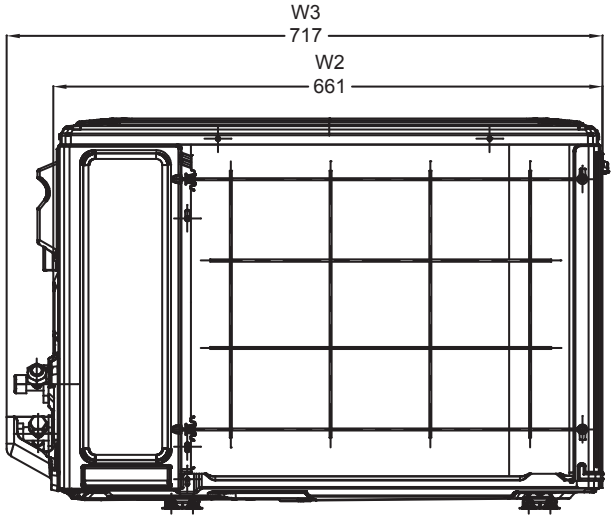

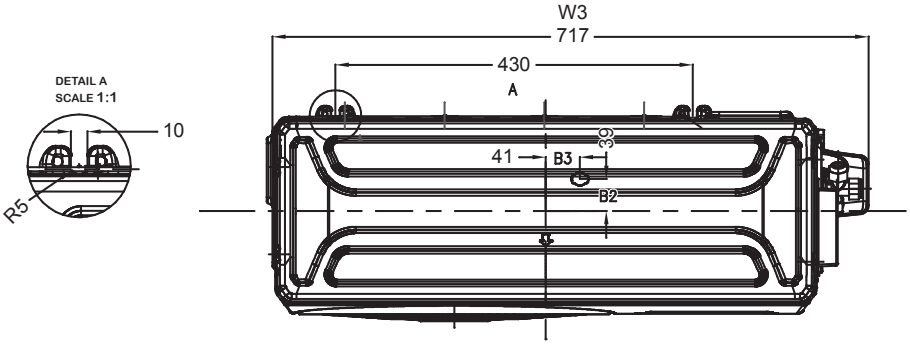

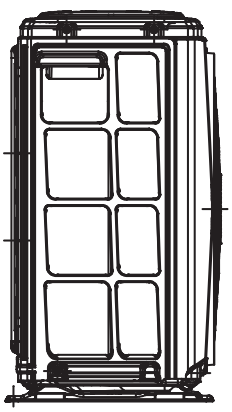

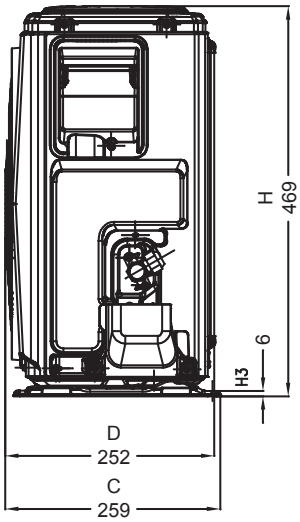

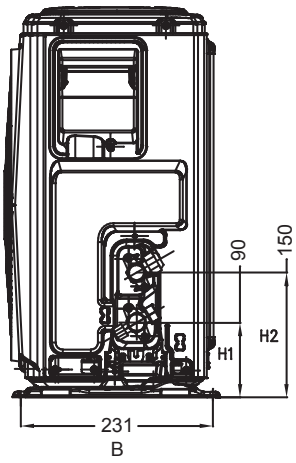

OUTDOOR UNIT DIMENSION

MSCH-19CRFN8-OD

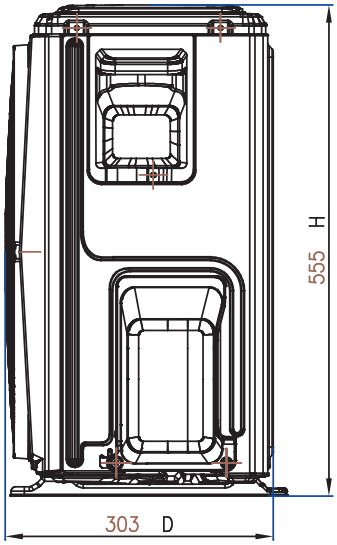

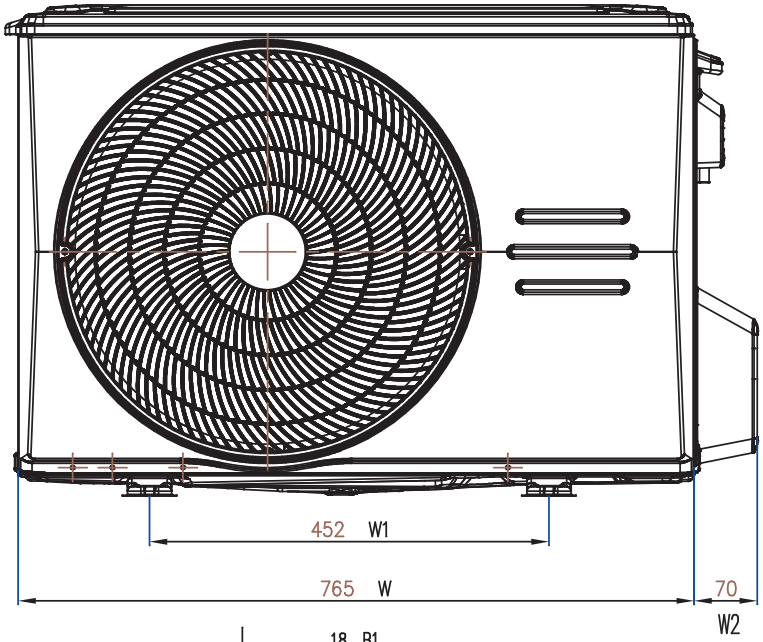

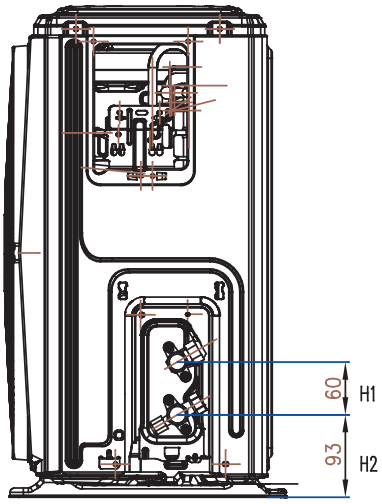

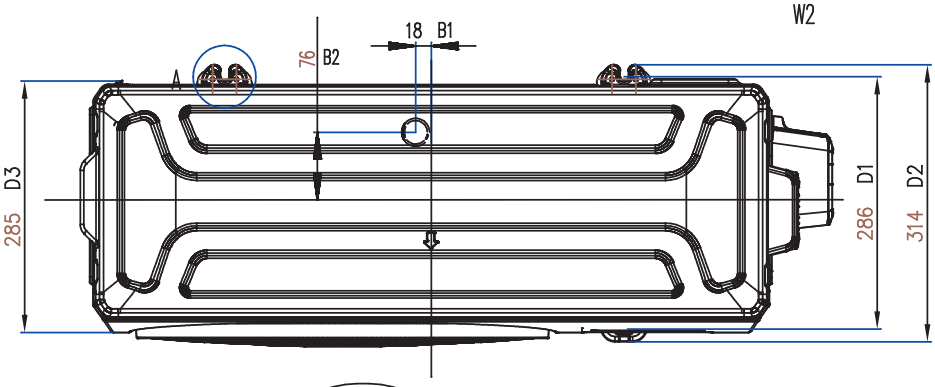

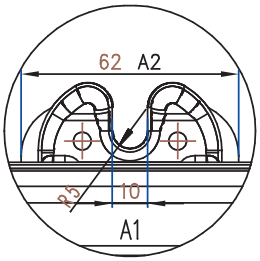

OUTDOOR UNIT DIMENSION

MSCH-22CRFN8-OD & MSCH-25CRFN8-OD

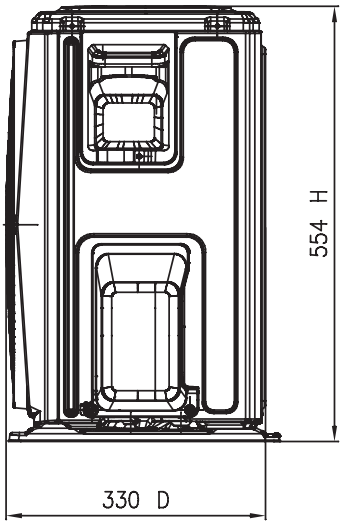

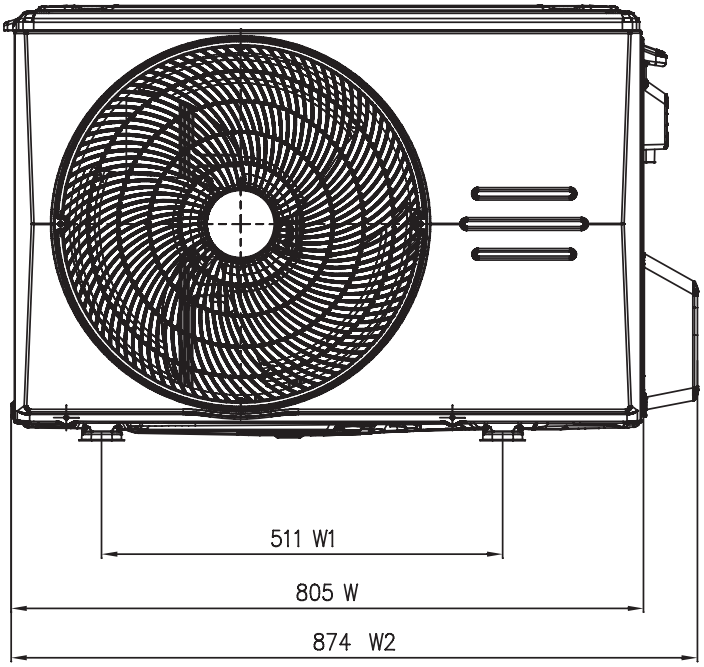

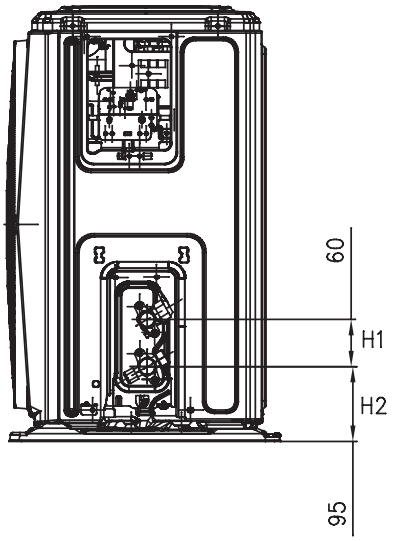

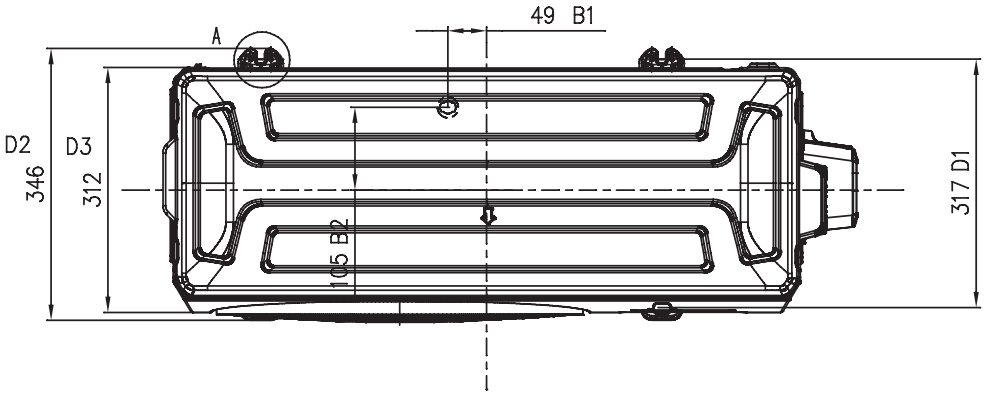

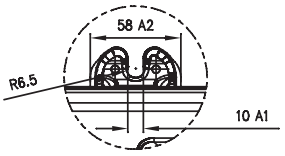

OUTDOOR UNIT DIMENSION

MSCH-30CRFN8-OD

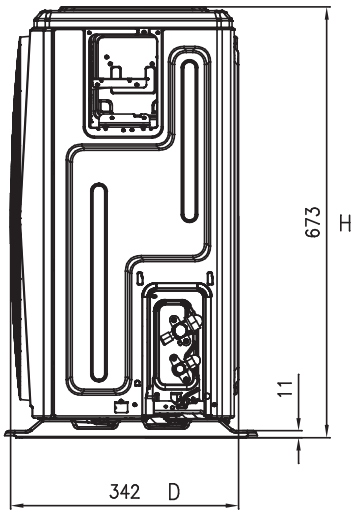

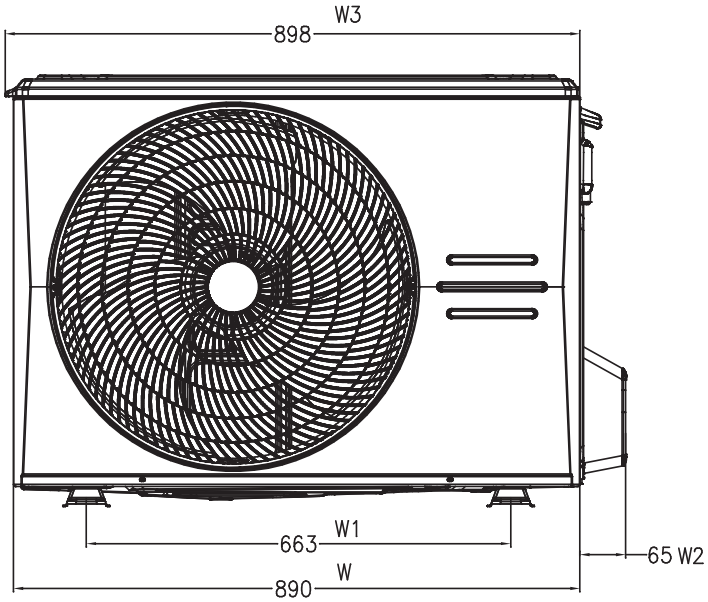

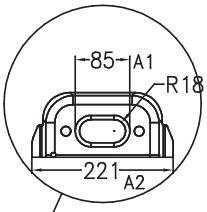

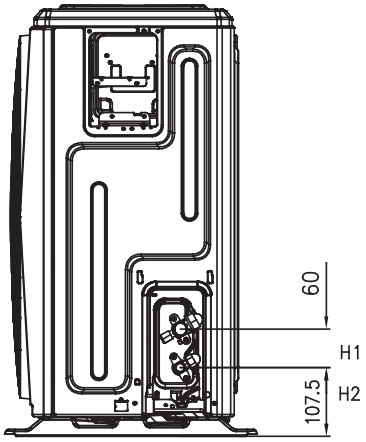

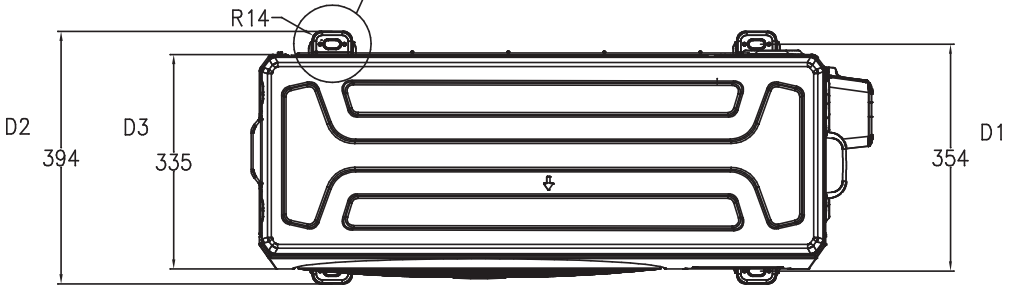

ERROR CODE QUICK TROUBLESHOOTING

Display Code	Error Information	Quick Solution
dF	Defrost	Normal Display, not error code
CL	Active Clean	
nF	Filter replacement reminder(power on display for 15 seconds)	
FC	Forced cooling	
AP	AP mode of WIFI connection	
CP	Remote switched off	
SD	Power abnormal detection	Check power supply
EH 00/EH0R	Indoor EEPROM malfunction	Check power and Indoor PCB
EL 01	Communication malfunction between indoor and outdoor units	S signal wire conenciton, outdoor main control board, indoor PCB
EH 02	Zero-crossing signal detection error	Check connection wire, check indoor PCB
EH 03	The indoor fan speed is operating outside of the normal range	Check indoor fan motor wire connection,indoor PCB, indoor Fan motor
EC 51	Outdoor EEPROM parameter error	Outdoor main PCB
EC 52	Condenser coil temperature sensor T3 is in open circuit or short circuit	Check outdoor condenser coil sensor or main PCB
EC 53	Outdoor ambient temperature sensor T4 is in open circuit or short circuit	Check outdoor condenser room temp. sensor or main PCB
EC 54	Compressor discharge temperature sensor TP is in open circuit or short circuit	Check outdoor compressor discharge temp. sensor or main PCB
EH 60	Indoor room temperature sensor T1 is in open circuit or short circuit	Check indoor room temp. sensor
EH 61	Evaporator coil middle temperature sensor T2 is in open circuit or short circuit	Check indoor coil temp. sensor
EC 07	The outdoor fan speed is operating outside of the normal range	Check outdoor fan motor wire connection,outdoor main PCB, outdoor Fan motor
EH 0b	Communication error between indoor PCB and display PCB	Check indoor display board connection wire
EL 0C	Refrigerant leakage detection System lacks refrigerant	Check gas leaking, copper pipe flare nut, indoor PCB
PC 00	IPM malfunction or IGBT over-strong current protection	Wire connection, Inverter modular, Outdoor Main PCB, compressor
PC 01	Outdoor unit voltage protection (low or high voltage)	Power supply, Inverter modular, Outdoor Main PCB, Reactor
PC 02	"Compressor top discharge temperature sensor protection IPM module or High pressure protection"	Check sensor, gas pressure, system blockage
PC 04	Inverter compressor drive error	Inverter modular, Outdoor Main PCB, compressor
PC 40	Communication error between outdoor main chip and compressor driven chip	Check outdoor main PCB
PC 03	High pressure protection or low pressure protection	Check outdoor main PCB
PC 08	Current overload protection	Wire connection, Outdoor Main PCB, Reactor, Outdoor Fan motor
FH 0P	AP mode is active but there is no WIFI kit installed	Check Wi-Fi connection

MIDEA SCOTT & ENGLISH ELECTRONICS SDN BHD (199001002951 (194517-X))

No. 16, Jalan Chan Sow Lin, 55200 Kuala Lumpur

PENANG BRANCH
NO.35, JALAN PERNIAGAAN GEMILANG 1,
PUSAT PERNIAGAAN GEMILANG,
14000 BUKIT MERTAJAM, PULAU PINANG.

PERAK BRANCH
NO.12 & 12A, BERCHAM BISTARI 1,
MEDAN BERCHAM BISTARI,
31400, IPOH, PERAK.

PAHANG BRANCH
NO.258, GROUND FLOOR, JALAN AIR PUTIH,
TAMAN AIR PUTIH MEWAH,
25350 KUANTAN, PAHANG.

KELANTAN BRANCH
PT 1436, GROUND FLOOR,
TAMAN KOPERATIF TANJUNG CHAT,
15300 KOTA BHARU, KELANTAN.

MELAKA BRANCH
NO.385L, TAMAN PERINGGIT JAYA,
75400 PERINGGIT, MELAKA.

JOHOR BRANCH
NO. 10, JALAN EKOPERNIAGAAN 1/24,
ECO BUSINESS PARK 1,
81100 JOHOR BAHRU, JOHOR.

SABAH BRANCH
INANAM SURIA COMMERCIAL CENTRE,
LOT B, UNIT 0-9, UNIT 1-9,
GRD. FLOOR & 1ST FLOOR,
88450, KOTA KINABALU, SABAH.

SARAWAK BRANCH
1ST FLOOR, LOT 8517,
STUTONG COMMERCIAL CENTRE,
JALAN STUTONG,
93350 KUCHING, SARAWAK.

Midea Care Line
1300-22-0133

Dealer's Stamp:

midea_malaysia

Midea Malaysia

midea.com/my